Gray-C28 PRODUCT DATA SHEET

Jūrmalas Mežaparki Ltd.
1 Garkalnes street, Jurmala
+371 299 006 03, www.jmp.lv

Construction is made from glued wood, stainless and galvanized steel metal, rope and HPL laminate.

1
children

<6
age

0,8
height of fall

25 kg
(heaviest part)

85 kg

2h
(without excavation and concreting)

1720 x 500 x 240 mm
Largest component

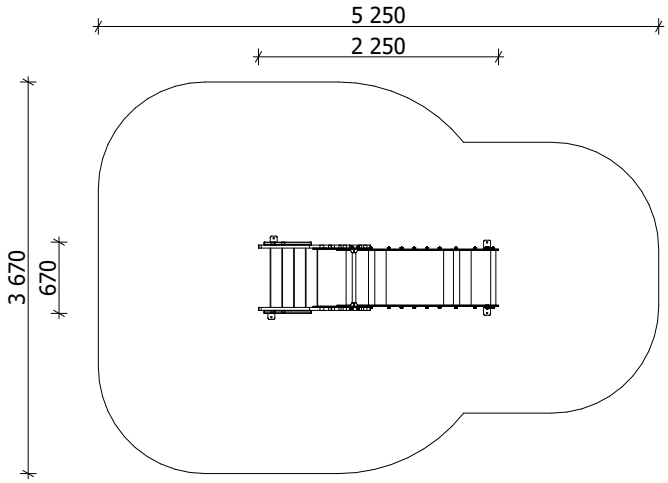

Lenght: **2 250 mm**
Width: **670 mm**
Height: **1 680 mm**

Lenght of safety area: **5 250 mm**
Width of safety area: **3 670 mm**
Required safety area: **15 m²**
(Install shock absorbing material according to EN 1176:2017)

Available color's palette

Do not place stainless steel slide directly to south!

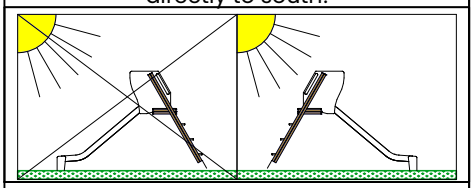

Foundation should be accessable for maintenance.

Playground equipment steel foundation is concreted in the ground at the planned location. The equipment can be used after two days when the concrete becomes solid. During assembly no children are allowed in the area.
For any playground equipment with a free fall height exceeding 600 mm, or equipment that exerts forced movement on the user's body, the entire impact area must be equipped with a certified impact-attenuating surface.
Equipment safety checkings must be performend once in a week in high vandalism risk area.
Maintainance is required once in every 3 months, depending on usage.

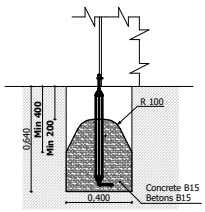

0,053 m³

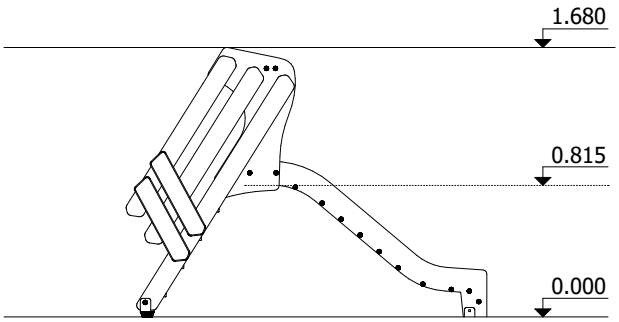

Transportation:

Spare parts:
All needed spare parts and elements, when warranty time expires can be ordered in Jūrmalas Mežaparki Ltd., and all the goods will be ready for delivery in 5 working days.

According to EN 1176-1:2017

Manufactured according:
07.11.2019.